TACIAK AG

Electrotechnical Engineering

Level Sensor Systems for Liquids

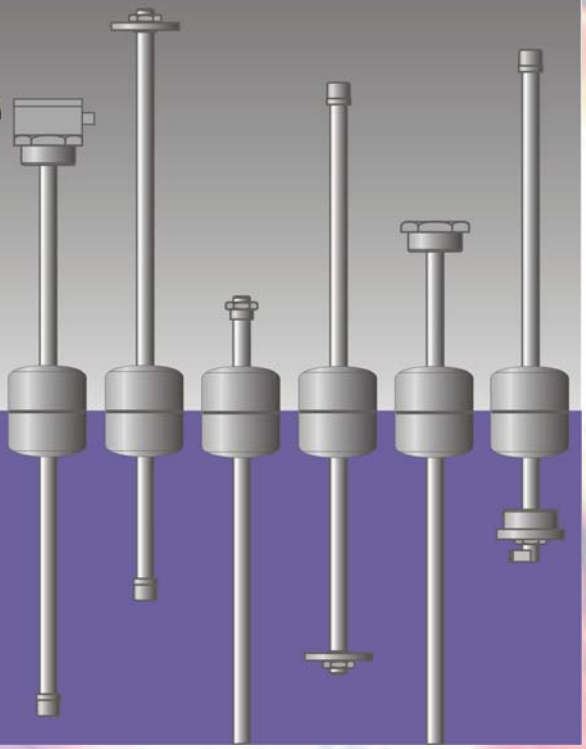

Taciak AG

Electrotechnical Engineering

LEVEL SENSORS for Liquids

TACIAK AG *Manufakturing Program*

Electric-Mechanical applications for any branch of industry or craft

Taciak AG supplies high standard modules as individual components or as complete systems for installations. We provide for a very efficiant linkage between mechanical, electrical and informatic components.

Automation Technology, Control Boxes and Cord Sets

We supply automation technology according to customer request.
Systems for complete installations for industry and craft.

Level Control for Liquids

We are specialised in the development and manufacture of level sensors on the base of Reed Contacts for individual components and complete systems.

Position Sensor for Hydraulic Cylinders

Essentially for the use under hazardous environmental conditions we develope and manufacture position transducers on the base of Reed contacts mainly for the mining industry and for Eex i a... as well.

Quality Control

ATEX products explosionproof acc. to 94/9 EG

Based on the EN/ISO 9001 of:EXAM BBG Prüf- und Zertifizier GmbH "0158"

Content: **Page:**

Description		3 — 4
NMG 51-54	(monitored by resistor)	5 — 6
NMG 71-73	(monitored by voltage)	7 — 8
NMG 81 & 82	(monitored by current)	9 — 10
Float		11
Transducer NIV 4.XX		12
Conditions of Sale and Payment (Excerpt)		13

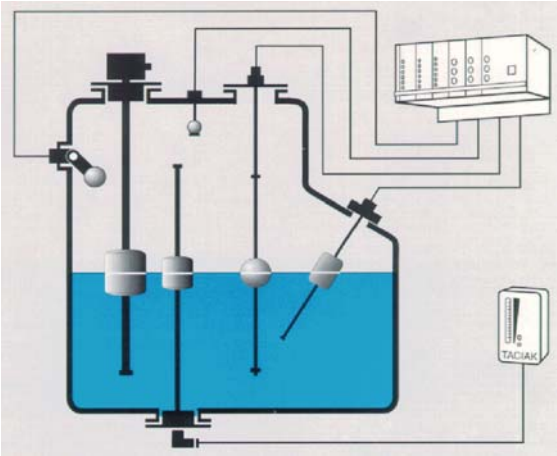

The Product Range:

Standard Float Switch made of PVC or Stainless steel (1.4571)
Float switch defined by the customer made of PA, NBR, PP, Brass etc.
Electronic level display, evaluation and control.

We Offer:

Float switches are in general tailor made to customer reqiurements.
Please tell us your individual requirements.
Component parts of our products are available from stock. Feasibility samples can be quickly arranged.

Float switches for one level only:

The float switch has one Reed contact for closing, opening or for changing over to indicate the upper or lower level. The switches are suitable for nearly all liquids and are compression proof up to25 bar depending on the type of material. The structural shape, the rising pipe, the connections and the cable length are all variable.

Float switches for two and more measuring points:

The float switch has several Reed contacts for closing, opening or changing over to level indication. The switches are suitable for nearly all liquids and are compression proof up to 16 bar depending on the type of material. The structural shape, the rising pipe, the connections and the cable length are all variable.

Float switches for analogue level control:

Float switches for analogue control are equipped with Reed relays of 3 – 24 mm.
The standard design is equipped with an internal electronic evaluation device or with a resistance measuring relay (Pot-substitute). The switches are suitable for all liquids and are compression proof up to 25 bar depending on the type of material. The structural shape, the rising pipe, the connections and the cable length are all variable.

Technical Advantages

The filling level is permanently indicated with a high exactness of iteration, independent from pressure, temperature and conducting capacity.
The filling level is remotely indicated over extremely long lines.
Measurements are proportionally evaluated, independently of the shape and the position of the tank.
Limiting values are progressively adjustable (and can subsequently be changed).
Limiting values are adjustable to varying parameters.
The level metering stick gives a proportional signal according to 0 – 100 % of the measuring length.
Normally the measuring signal will internally be processed so that the desired outlet is available short circuit proof and correctly polarized.
A selectivity of < 12 mm is standardized, a selectivity of 3 to 24 mm however is possible depending on the parameters of application.

Electronics for indication, evaluation and control

We manufacture modules for the completion and the enlargement of systems, with or without level indication, with interface or with a no-potential relay outlet.

Type Specification: „Position Sensor/Transducer and Level Sensor/Transducer"

Name	Electrical Data	Electric Connection	Cable Length mm	Material Tube Diameter	Design Types „BF"	Pressure	Accessories	Selectivity	Measuring Length mm
aMG	**bb.**	**cc.**	**ddd.**	**ee.**	**ff.**	**g.**	**h.**	**ii.**	**jjjj**
WMG **N**MG	01= 12V/0,5-4,5 V **11= 12V/0,5-4,5 V** **05= 0-25 KΩ/m/24V** **06= 0-50 KΩ/m/24V** **51= 100-XXXX Ω/5V** **52= 200-XXXX Ω /5V** **53= 400-XXXX Ω /12V** **54= 1000-XXXX Ω /24V** **71= 24V/0,5-4,5 V** **72= 24V/1-5 V** **73= 24V/1-10V** **81= 24V/4-20 mA 2-Draht** 82= 24V/4-20 mA 3-Draht **Bold face printed: Preferred types with ATEX-Approval** **00=Special design**	**01= Plug M8x1mm** **02= Plug M12x1mm** **05= Socket M12x1mm** **11= Connector Box** **21= Plug DIN 43650** **51= Single Leads** **55= Wire 3x0,14 mm²** **56= Wire 2x2x0,14 mm²** **57= Wire 3x2x0,14 mm²** **58= Wire 4x2x0,14 mm²** **59= Wire 5x2x0,14 mm²** **65= Wire 3x0,25 mm²** **66= Wire 2x2x0,25 mm²** **67= Wire 3x2x0,25 mm²** **75-89= Shielded Wires** **75= Wire 3x0,14 mm²** **76= Wire 2x2x0,14 mm²** **77= Wire 3x2x0,14 mm²** **85= Wire 3x0,25 mm²** **00=Special design**	**x 10 mm** **for example:** **005= 50 mm** **150= 1500 mm** **0000= Special design**	**Stainless Steel 1.4571** **01= 12x1 mm** **02= 14x1 mm** **03= 16x1 mm** **04= 16x1,5 mm** **05= 18x2 mm** **06= 24x4 mm** **07= 14x2 mm** **PVC-U** **51= 12x1,0 mm** **53= 14x1,0 mm** **55= 16x1,2 mm** **61= 20x2,3 mm** **00= Special design**	**Acc. to Drawg.** **01= BF X** **02= BF Y** **03= BF Z** **04= BF U** **05= BF V** **06= BF W** **21= BF A1** **22= BF A2** **23= BF A3** **24= BF B1** **25= BF B2** **26= BF B3** **29= BF C3** **30= BF D1** **31= BF D2** **32= BF D3** **00= Special design**	**1= 6 bar** **2= 16 bar** **3= 25 bar** **4= 100 bar** **5= 200 bar** **6= 300 bar** **7= 400 bar** **8= 500 bar** **9= 600 bar** **0= 1000 bar** **0= Special des.**	**1= 1x PT 100** **2= 2x PT 100** **3= 3X PT 100** **4** **5** **6** **7** **8= 1 Contact** **9= 2 Contacts** **0= =no Accessories**	**01= 1 mm** **02= 2 mm** **03= 3 mm** **04= 4 mm** **05= 5 mm** **06= 6 mm** **08= 8 mm** **12= 12 mm** **16= 16 mm** **20= 20 mm** **24= 24 mm** **00= Special des.**	**for example:** **0750= 750 mm** **1500= 1500 mm** **Please mind:** **Measuring length means active length of the measuring stick and not the total length of the unit.**

Approvals:

BVS Nr.: 91C1095	**Attestation of conformity for:**	**: WMG 01 (Mining version, acc. to ATEX replaced by WMG 11)**
MPA-NRW-HS043-96	**Attestation of design for:**	**: WMG 01 / 05 / 06 (mechanically identical with all WMG – Types)**
BVS 03 ATEX E 166X	**Attestation of conformity Group I and II valid for:**	**: WMG und NMG 11 / 05 / 06 / 51 – 54 / 71 – 73 and 81**

Manufacture: **ATEX – Products explosionproof acc. to 94/9 EG**
Based on EN/ISO 9001 by: EXAM-BBG Prüf- und Zertifizier GmbH, D-44809 Bochum

Level Measuring Stick Type: NMG 51, 52, 53, 54

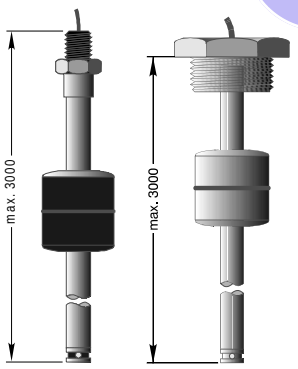

Technical Data:

Standard Material:	*PVC- U grey/ Stainless Steel*
Tube diameter:	*12 – 20 mm*
Permissible temperature	*- 20° C to +60° C (+80° C)*
Permissibile pressure	*6 – 25 bar*
Measuring length	*max. about 3000 mm*
Standard selectivity	*< 12 mm*
Float	*Stainless Steel/Synthetic Material*
Protective system	*IP 65*

Wiring diagram:

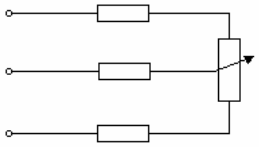

With attestation of conformity group I and II for use with an intrinsically safe power supply.

Type Specification „Level Sensor/Transducer“

Name	Elektrical Data	Elektric Connection	Cable Lenght mm	Material Tube diam.	Design Types „BF“	Pressure	Accesso-ries	Selec-tivity	Measuring Length mm
NMG	bb.	cc.	ddd.	ee.	ff.	g.	h.	ii.	jjjj.
NMG	51= 100-X Ω / 5V 52= 200-X Ω / 5V 53= 400-X Ω / 12V 54= 1000-X Ω / 24V 00=Special deign	01= Plug M8x1mm 02= Plug M12x1mm 05= Socket M12x1mm 11= Connector Box 21= Plug DIN 43650 51= Single Leads 55= Wire 3x0,14 mm² 56= Wire 2x2x0,14 mm² 57= Wire 3x2x0,14 mm² 58= Wire 4x2x0,14 mm² 65= Wire 3x0,25 mm² 00=Special design	x 10 mm for example: 005= 50 mm 150= 1500 mm etc. 0000= Special design	Stainless Steel 1.4571 01= 12x1 mm 03= 16x1 mm 05= 18x2 mm PVC-U Grey 51= 12x1,0 mm 53= 14x1,0 mm 55= 16x1,2 mm 61= 20x2,3 mm 00= Special design	Acc. to Drawg 21= BF A1.A0 22= BF A2.A0 23= BF A3.A0 24= BF B1.A0 25= BF B2.A0 26= BF B3.A0 29= BF C3.A0. 30= BF D1.A0 31= BF D2.A0 32= BF D3.A0 00= Special design	1= 6 bar 2= 16 bar 3= 25 bar 0=Special design	1= 1x PT 100 2= 2x PT 100 3= 3X PT 100 4 5 6 7 8= 1 Contact 9= 2 Contacts 0= no accessories	04= 4 mm 08= 8 mm 12= 12 mm 16= 16 mm 20= 20 mm 00=Special design	z.B.: 0750= 750 mm Please note: Measuring length means active length of measuring stick and not the total length of the unit.

Approvals: BVS 03 ATEX E 166X Attestation of conformity Group I and II valid for NMG 11 / 05 / 06 / 51 – 54 / 71 – 73 und 81
Please note: Not all combinations are available with an ATEX attestation of conformity!

Examples for Ordering: „A“= with ; „B“= without attestation of conformity

Our Code No.:	*Type Specification*	*Measuring Length: mm*	*Total Length: mm*	*Classification to No.: BVS 03 ATEX E 166X*
9A51xxxx	NMG51.c c.d d d.e e.f f.g .h.i i.j j j j	from 50	to approx. 3500	Ex II 2 G EEx ia IIC T4 Ex I M2 EEx ia I
9B51xxxx	NMG51.c c.d d d.e e.f f.g .h.i i.j j j j	from 50	to approx. 3500	without attestation of conformity
9A510750	WMG51.65.150.03.01.7.0.12.0750	750	dependent on type	Ex II 2 G EEx ia IIC T4 Ex I M2 EEx ia I
9B520900	WMG52.65.150.03.01.7.0.12.0900	900	dependent on type	without attestation of conformity
9A530900	WMG53.65.150.03.01.7.0.12.0900	900	dependent on type	Ex II 2 G EEx ia IIC T4 Ex I M2 EEx ia I
9B540900	WMG53.65.150.03.01.7.0.12.0900	900	dependent on type	without attestation of conformity

Standards of Design Types (Samples)

Level metering stick NMG 51, 52, 53, 54.
A combination of all designs is possible.

A 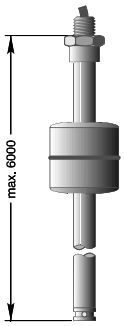 A1=G 3/8“ A2=G 1/2“ A3=G 1“	K	O **Special type customer defined**
B 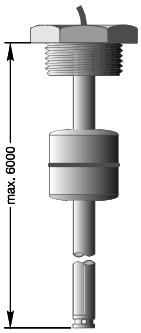 B1=G 1“ B2=G 1/5“ B3=G 2“	C 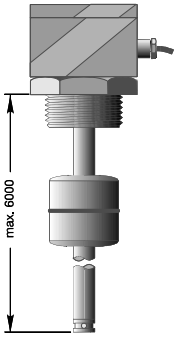 C3=G 2“	D 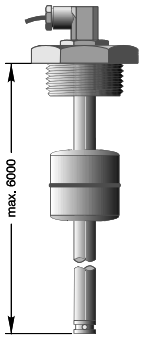 D1=G 1“ D2=G 1/5“ D3=G 2“
G 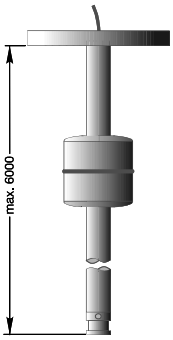 On inquiry	H 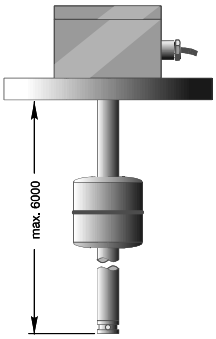 On inquiry	I 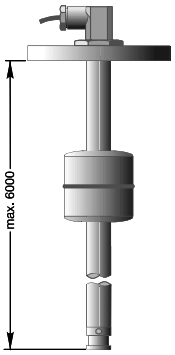 On inquiry

Level measuring stick Type: NMG 71, 72, 73

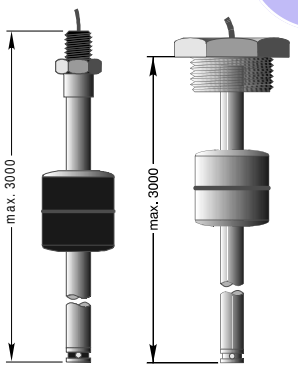

Technical Data:

Standard Material:	*PVC- U grey/ Stainless Steel*
Tube diameter:	*12 – 20 mm*
Permissible temperature	*- 20° C to +60° C (+80° C)*
Permissibile pressure	*6 – 25 bar*
Measuring length	*max. about 3000 mm*
Standard selectivity	*< 12 mm*
Float	*Stainless Steel/Synthetic Material*
Protective system	*IP 65*

Wiring diagram:

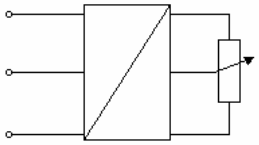

With attestation of conformity group I and II for use with an intrinsically safe power supply.

Type Specification „LevelSensor/Transducer“

Name	Electrical Data	Electric Connection	Cable Length mm	Material Tube diam.	Design Types „BF“	Prssure	Accesso-ries	Selctivity	Measuring Length mm
NMG	bb.	cc.	ddd.	ee.	ff.	g.	h.	ii.	jjjj.
NMG	71= 30 V/0,5-4,5 V 72= 30V/1-5 V 73= 30 V/1-10V 00=Special design	01= Plug M8x1mm 02= Plug M12x1mm 05= Socket M12x1mm 11= Connector box 21= Plug DIN 43650 51= Single Leads 55= Wire 3x0,14 mm² 56= Wire 2x2x0,14 mm² 57= Wire 3x2x0,14 mm² 58= Wire 4x2x0,14 mm² 65= Wire 3x0,25 mm² 00=Special design	x 10 mm for e-xample: 005= 50 mm 150= 1500 mm etc. 0000= Special design	Stainless Steel 01= 12x1 mm 03= 16x1 mm 05= 18x2 mm PVC-U grey 51= 12x1,0 mm 53= 14x1,0 mm 55= 16x1,2 mm 61= 20x2,3 mm 00= Special design	Acc. to Drawg. 21= BF A1.A0 22= BF A2.A0 23= BF A3.A0 24= BF B1.A0 25= BF B2.A0 26= BF B3.A0 29= BF C3.A0. 30= BF D1.A0 31= BF D2.A0 32= BF D3.A0 00= Special design	1= 6 bar 2= 16 bar 3= 25 bar 4= 100 bar 0=Special design	1= 1x PT 100 2= 2x PT 100 3= 3X PT 100 4 5 6 7 8= 1 Contact 9= 2 Contacts 0= no accessories	04= 4 mm 08= 8 mm 12= 12 mm 16= 16 mm 20= 20 mm 00=Special design	For example: 0750= 750 mm Please note: Measuring length means active length of the measuring stick and not the total length of the unit.

Approvals: BVS 03 ATEX E 166X Attestation of conformity Group I and II valid for NMG 11 / 05 / 06 / 51 – 54 / 71 – 73 and 81
Please note: Not all combinations are available with an ATEX attestation of conformity!

Examples for Ordering: „A“= with ; „B“= without attestation of conformity

Our Code No.:	*Type Specification*	*Mesuring Length: mm*	*Ges.-Länge: mm*	*Classification to No.: BVS 03 ATEX E 166X*
9A71xxxx	NMG71.c c.d d d.e e.f f.g .h.i i.j j j j	from 50	to approx. 3500	Ex II 2 G EEx ia IIC T4 Ex I M2 EEx ia I
9B71xxxx	NMG71.c c.d d d.e e.f f.g .h.i i.j j j j	from 50	to approx. 3500	without attestation of conformity
9A710750	WMG71.65.150.03.01.7.0.12.0750	750	dependent on type	Ex II 2 G EEx ia IIC T4 Ex I M2 EEx ia I
9B710900	WMG71.65.150.03.01.7.0.12.0900	900	dependent on type	without attestation of conformity
9A720900	WMG72.65.150.03.01.7.0.12.0900	900	dependent on type	Ex II 2 G EEx ia IIC T4 Ex I M2 EEx ia I
9B720900	WMG73.65.150.03.01.7.0.12.0900	900	dependent on type	without attestation of conformity

Standards of Design Types (Samples)

Level metering stick NMG 71, 72, 73.
A combination of all designs is possible.

A 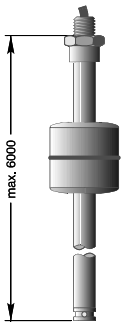 A1=G 3/8“ A2=G 1/2“ A3=G 1“	K	O Special type customer defined
B 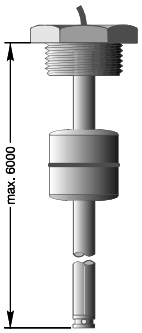 B1=G 1“ B2=G 1/5“ B3=G 2“	C 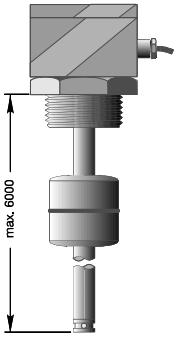 C3=G 2“	D 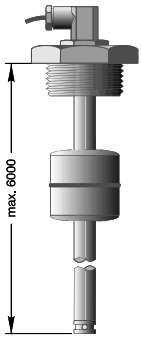 D1=G 1“ D2=G 1/5“ D3=G 2“
G 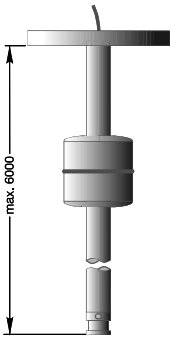 On inquiry	H 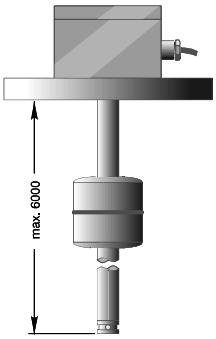 On inquiry	I 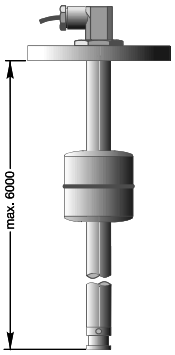 On inquiry

Level measuring stick Type: NMG 81, 82

Technical Data:

Standard Material:	*PVC- U grey/ Stainless Steel*
Tube diameter:	*12 – 20 mm*
Permissible temperature	*- 20° C to +60° C (+80° C)*
Permissibile pressure	*6 – 25 bar*
Measuring length	*max. about 3000 mm*
Standard selectivity	*< 12 mm*
Float	*Stainless Steel/Synthetic Material*
Protective system	*IP 65*

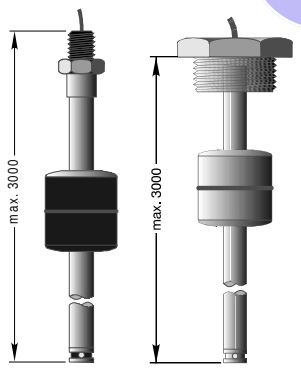

Wiring diagram:

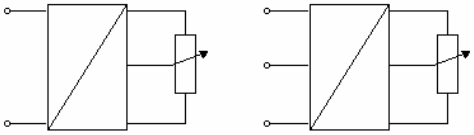

With attestation of conformity group I and II for use with an intrinsically safe power supply. NMG 82 without an Ex - approval

Type Specification „LevelSensor/Transducer“

Name	Electrical Data	Electric Connection	Cable Length mm	Material Tube diam.	Design Types „BF“	Pressure	Accesso-ries	Selec-tivity	Measuring Length mm
NMG	bb.	cc.	ddd.	ee.	ff.	g.	h.	ii.	jjjj.
NMG	81= 24V/4-20 mA 2-wire 82= 24V/4-20 mA 3-wire 00= Special design	01= Plug M8x1mm 02= Plug M12x1mm 05= socket M12x1mm 11= Connector Box 21= Plug DIN 43650 51= Single Leads 55= Wire 3x0,14 mm² 56= Wire 2x2x0,14 mm² 57= Wire 3x2x0,14 mm² 58= Wire 4x2x0,14 mm² 65= Wire 3x0,25 mm² 00=Special design	x 10 mm for example: 005= 50 mm 150= 1500 mm etc. 0000= Special design	Stainless Steel 1.4571 01= 12x1 mm 03= 16x1 mm 05= 18x2 mm PVC-U grey 51= 12x1,0 mm 53= 14x1,0 mm 55= 16x1,2 mm 61= 20x2,3 mm 00= Special design	Acc. to drawg. 21= BF A1.A0 22= BF A2.A0 23= BF A3.A0 24= BF B1.A0 25= BF B2.A0 26= BF B3.A0 29= BF C3.A0. 30= BF D1.A0 31= BF D2.A0 32= BF D3.A0 00= Special design	1= 6 bar 2= 16 bar 3= 25 bar 0= Special design	1= 1x PT 100 2= 2x PT 100 3= 3X PT 100 4 5 6 7 8= 1 Contact 9= 2 Contacts 0= no accessories	04= 4 mm 08= 8 mm 12= 12 mm 16= 16 mm 20= 20 mm 00= Special design	z.B.: 0750= 750 mm Please note: Measuring length means active length of measuring stick and not the total length of the unit.

Approvals: BVS 03 ATEX E 166X Attestation of Conformity Group I und II valid for NMG 11 / 05 / 06 / 51 – 54 / 71 – 73 und 81
Please note: Not all combinations are available with an ATEX attestation of conformity!

Examples for Ordering: „A“= with ; „B“= without attestation of conformity

Our Code No.:	*Type Specification*	*Mesuring Length: mm*	*Ges.-Länge: mm*	*Classification to No.: BVS 03 ATEX E 166X*
9A81xxxx	NMG81.c c.d d d.e e.f f.g .h.i i.j j j j	from 50	to approx. 3500	Ex II 2 G EEx ia IIC T4 Ex I M2 EEx ia I
9B81xxxx	NMG81.c c.d d d.e e.f f.g .h.i i.j j j j	from 50	to approx. 3500	without attestation of conformity
9A810750	WMG81.65.150.03.01.7.0.12.0750	750	dependent on type	Ex II 2 G EEx ia IIC T4 Ex I M2 EEx ia I
9B810900	WMG81.65.150.03.01.7.0.12.0900	900	dependent on type	without attestation of conformity
9B820900	WMG82.65.150.03.01.7.0.12.0900	900	dependent on type	without attestation of conformity

Standards of Design Types (Samples)

Level metering stick NMG 81 and 82.
A combination of all designs is possible.

A 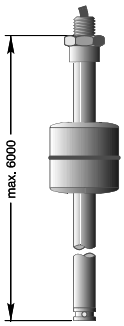 A1=G 3/8“ A2=G 1/2“ A3=G 1“	K	O Special type customer defined
B 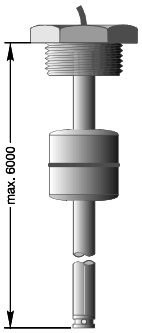 B1=G 1“ B2=G 1/5“ B3=G 2“	C 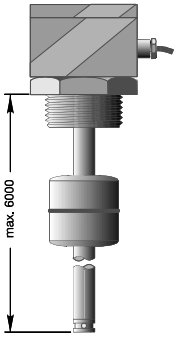 C3=G 2“	D 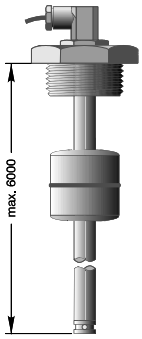 D1=G 1“ D2=G 1/5“ D3=G 2“
G 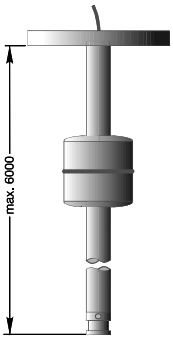 On inquiry	H 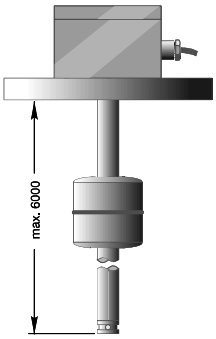 On inquiry	I 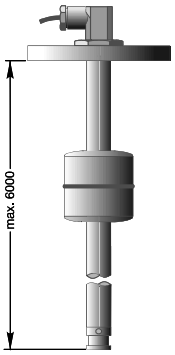 On inquiry

Float
Dimensions

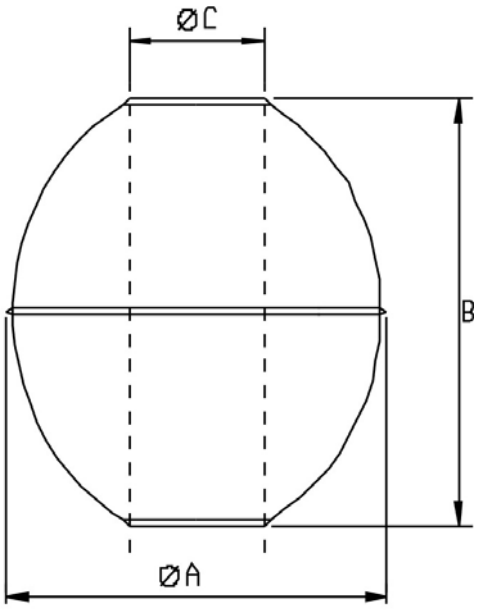

Ball float (K)

Material	Type No.:	Shape	Ø A (mm)	B (mm)	Ø C (mm)
	N0160	Z	42	28	13,5
PVC	N0160	Z	42	38	13,5
	N0160	Z	55	54	22
	N0150	Z	27	29	9
PP	N0151	Z	42	38	13,5
	N0152	Z	55	54	22
	N0161	Z	42	28	13,5
PA	N0161	Z	42	38	13,5
Special design on request					

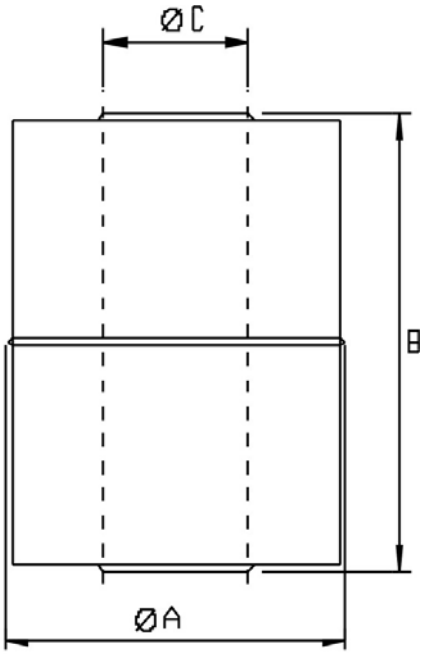

Cylinder float (Z)

Material	Type No.:	Shape	Ø A (mm)	B (mm)	Ø C (mm)
	N0004	Z	27	31	10
	N0001	Z	43	43	15
Stainless Steel	N0014	K	83	81	15
1.4571	N0016	K	105	103	23
	N0012	Z	51,5	58	19
Special design on request					

Taciak Transducer Type: NIV 8.xx

General description

By the transducer NIV 8.xx the resistance measured on the input is transformed into proportional analogue data on the output and an additional connection with zero potential is provided for.

Range of application

The measuring range is designed for a three- wire potentiometer circuit to measure a value of resistance from 1 kOhm to 100 kOhm.

The signal of resistance on the input is transformed into a proportional current signal on the output and is particularly suitable for an evaluation by our Level Sensor/Transducers.

The signal can be used for level indication, as drive impulse for digital limit selectors or as feeder to a SPS.

Additionally a centre -zero relay connection is provided. On the front side the switching parameters are set by a potentiometer.

Wiring diagram:

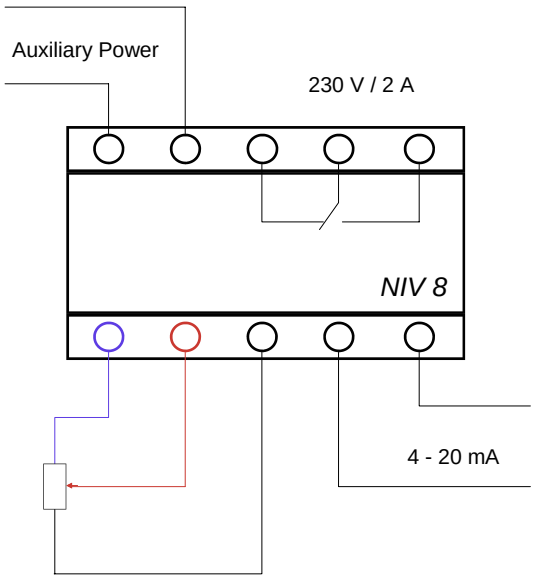

Technical data:

Input:	***1 – 100 kOhm***
Output:	***4 – 20 mA (2- wire)***
	centre-zero relay
Auxiliary Power:	***(refer to ordering data)***
Operating temperature:	***0° to +60° Celsius***
Storing temperature:	***-25° to +70° Celsius***
Protective system:	***IP 40***
Structural shape:	***housing ABS***
Manner of fastening:	***fitted to 35mm***
	standard bar
Dimensions:	***45 x 73,2 x 120 mm***
Weight:	***200 g***

Ordering Data

Code No.	Type	Input	Output	Aux. Power	max. Rating
N 9751	NIV 8.1	1 - 100 kOhm	4 - 20 mA (centre-zero relay)	24 V - DC	470 Ohm
N 9752	NIV 8.2	1 - 100 kOhm	4 - 20 mA (centre-zero relay)	115 V - AC	470 Ohm
N 9753	NIV 8.3	1 - 100 kOhm	4 - 20 mA (centre-zero relay)	230 V - AC	470 Ohm

Conditions of Sale and Payment (Excerpt)

The "General conditions of sale for products and services of the Electrical Industry" will apply exclusively insofar as they do not contradict our following conditions of sale and payment. A customers order acknowledgement imposing his conditions of sale will be at variance with this and will also not be accepted unless we give written confirmation of his conditions acceptance.

1. *Prices are subject to being sold ex works and without packing*

2. *The pricelist gives the net price without VAT.*

3. *Freight and packing is calculated at cost price and not included in our quotation.*

4. *A discount of 2% is given on payments within ten days.*

5. *The given delivery time is without obligation, we will endeavour to meet it at all time.*

6. *The delivered goods remain our property until they are fully paid (reservation of ownership). A sale or processing of goods under reservation of ownership is permitted only with our express written previous consent. An assignment in advance prevails for all rights obtained by resale or processing.*

7. *Our products are designed and made under consideration of the relevant basic safety- and health-standards of the EC. After compliance with all standards an EC attestation of compliance is issued and the product CE-labelled. Any change or modification of a product delivered by us without our written consent will make invalid the EC attestation of conformity.*

8. *Only parts and assemblies delivered by us and used as directed are covered by the warranty. Consequential damages – no matter what kind – are expressly excluded.*

9. *D-59394 Nordkirchen-Südkirchen is place of performance. Venue for settlement of disputes shall be D-59348 Lüdinghausen.*

Nordkirchen, January 2000
Arnold Taciak

TACIAK AG
Electrotechnical Engineering

Our conditions of sale and payment will apply exclusively

other products:

Reed Position Sensors

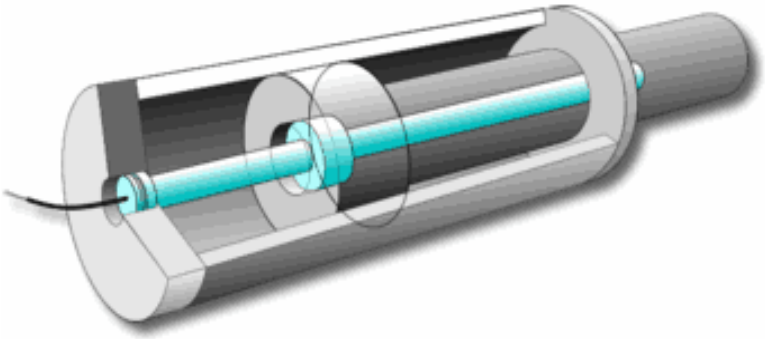

for the mining industry, for use in hazardous environmental conditions

Taciak AG

Electrotechnical Engineering

TACIAK AG
Electrotechnical Engineering

Kattenbeck 20 59394 Nordkirchen
telephone: 02596/1555 telefax: 02596/1855
email: info@taciak.de internet: www.taciak.de